MASTER® LOCK FITTING

UNION TYPE[PATENT NO. : 10-1842173] MASTER® LOCK
[REGISTRATION NO.:40-1790304]

OVERVIEW

The UNION FITTING is widely used on main and Sub line PFA pipings that connect with CCSS and WET equipment due to its safe design structure.

FEATURES

1. Enhanced airtightness due to multiple seal design structure
   (1st-Primary, 2nd-Back up, 3rd-Joint Seal, 4th-Grip Seal)
2. Reduction in equipment size possible with minimized design configuration
3. Addition of locking device to prevent loosening of PFA nut

TECHNICAL DATA

Port Connection	E&IB Ferrule Connection
Port Size	1/4", 3/8", 1/2", 3/4", 1", 1-1/4", 1-1/2", 2"

Operating Temperature	Operating Temperature (1/4"~1-1/4")	Operating Temperature (1-1/2"~2")
0 ~ 90 ℃	9kg/㎠(0.9Mpa)	7kg/㎠(0.7Mpa)
90 ~ 120 ℃	7kg/㎠(0.7Mpa)	5kg/㎠(0.5Mpa)
Over 150℃	Below 5kg/㎠(0.5Mpa)	Below 3kg/㎠(0.3Mpa)

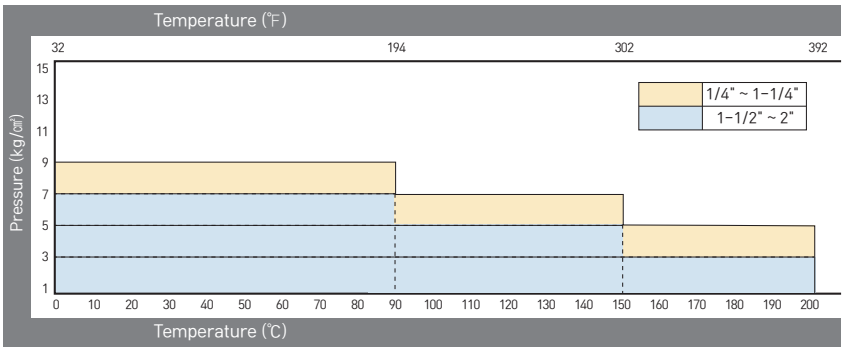

MATERIAL CONSTRUCTION

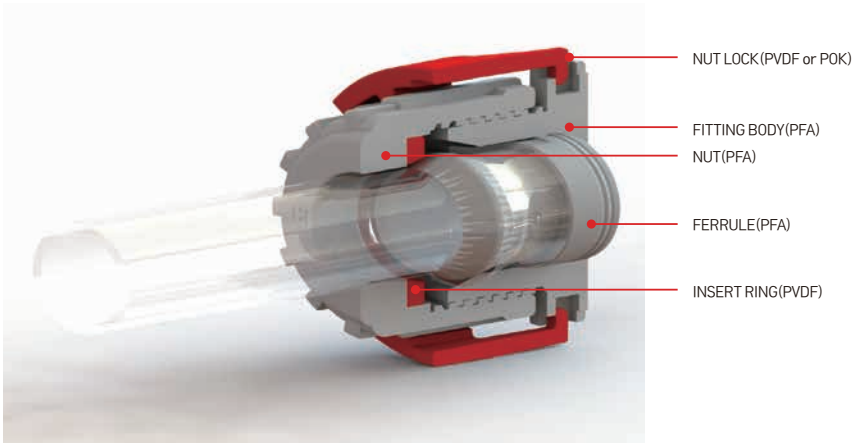

A Tube to Tube

Type	UNION STRAIGHT	UNION REDUCER	UNION TEE	UNION RED TEE
		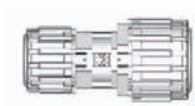	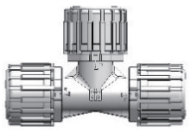	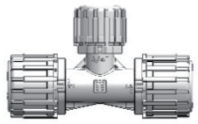
Part No.	UF-US	UF-UR	UF-UT	UF-URT

Type	UNION ELBOW	UNION RED ELBOW	PANNEL MOUNTING UNION
Part No.	UF-UE	UF-URE	UF-PMU

B Tube to Male or Female tube thread

Type	MALE CONNECTOR	MALE ELBOW CONNECTOR	FEMALE CONNECTOR
	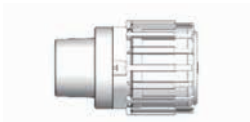		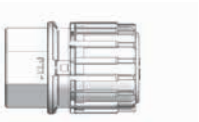
Part No.	UF-MC	UF-MEC	UF-FMC

C Space Saver

Type	SPACE SAVER ADAPTOR	SPACE SAVER UNION TEE	SPACE SAVER UNION ELBOW	ELBOW TUBE ADAPTOR SAVER
		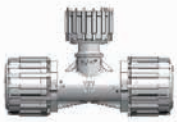		
Part No.	UF-SSA	UF-SSUT	UF-SSUE	UF-ETAS

D Others

Type	TUBE ADAPTOR	ELBOW TUBE ADAPTOR	UNION FLANGE ADAPTOR	TUBE END CAP
	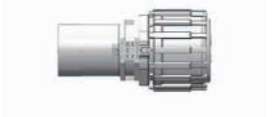	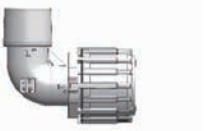	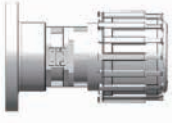	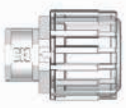
Part No.	UF-TA	UF-ETA	UF-UFA	UF-TCAP

Type	END CAP	NUT	FERRULE
Part No.	UF-UCAP	UF-NUT	UF-FRUL

MULTIPLE SEAL STRUCTURE

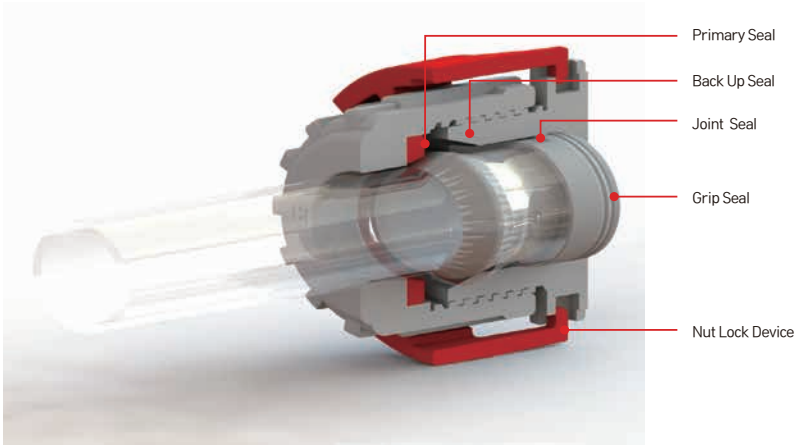

HOW TO ORDER

Product Name	CODE
UNION FITTING	UF

Code_Shape	CODE
UNION TEE	UT
UNION STRAIGHT	US
UNION REDUCER	UR
UNION RED TEE	URT
UNION RED ELBOW	URE
UNION FLANGE ADAPTOR	UFA
UNION ELBOW	UE
TUBE END CAP	TCAP
TUBE ADAPTOR	TA
SPACE SAVER UNION TEE	SSUT
SPACE SAVER UNION ELBOW	SSUE
PANNEL MOUNTING	PMU
NUT	NUT
MALE ELBOW CONNECTOR	MEC
MALE CONNECTOR	MC
FERRULE	FRUL
FEMALE CONNECTOR	FMC
END CAP	UCAP
ELBOW TUBE ADAPTOR	ETA
ELBOW TUBE ADAPTOR SAVER	ETAS
SPACE SAVER ADAPTOR	SSA

SIZE	CODE
1/4"	04
3/8"	06
1/2"	08
3/4"	12
1"	16
1-1/4"	20
1-1/2"	24
2"	32
15A	15
20A	20
25A	25
40A	40
50A	50

Example : UF – UT – 08

UF	UNION FITTING
UT	UNION TEE
08	1/2"

“SMART VALUE OPERATION PRODUCT LINE UP”

E&IB (Extrusion & Injection, Basic Co., Ltd) Corporate Mission :
E&IB is to become a key provider of safe, high performance, and advanced technology device and components for fluid management systems and applications that meet or exceed the needs and requirements of global customers.

65-59, Ucheonje2nongongdanji-ro, Ucheon-Myeon, Hoengseong-gun, Gangwon-do, Republic of Korea
Customer Service Tel : +82 033 345 8836
Customer Fax : +82 345 8837
www.enib.co.kr